Postel 100x200cm
LOVELY

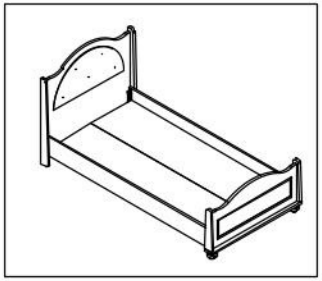

ACCESSORIE NO : 001	ACCESSORIE NO : 002	ACCESSORIE NO : 004	ACCESSORIE NO : 031	ACCESSORIE NO : 092
MİNİFİX MİL 6 MM	TİTUS MİNİFİX GÖVDE	ø8x30 KAVELA	KARYOLA MENTEŞE	4*18 MM S. VİDASI
15 ADET	15 ADET	10 ADET	04 ADET	16 ADET

ACCESSORIE NO : 114	ACCESSORIE NO : 627	ACCESSORIE NO : 420	ACCESSORIE NO : 144	ACCESSORIE NO : 109
M6*15 YSB VİDA	MANNESMAN 1010 ÇİFT DELİKLİ	PLS.KARYOLA AYAK	M6 SOMUN	M6*45 VİDA
28 ADET	03 ADET	06 ADET	06 ADET	06 ADET

ACCESSORIE NO : 189	ACCESSORIE NO : 105	ACCESSORIE NO : 107		
NOBLE AYAK	M6*30 YSB VİDA	M6*35 VİDA		
02 ADET	04 ADET	05 ADET		

				ACCESSORIE NO : 020
				MİNİFİX TAPA
				7 ADET

PLEASE ORDER THE ACCESSORIES ACCORDING TO THE REFERENCE NUMBER ON THE DRAWING(EXAMPLE ACCESSORIE NO-008 RAFIX MIL 1.PCS.)

nábytek harmonia

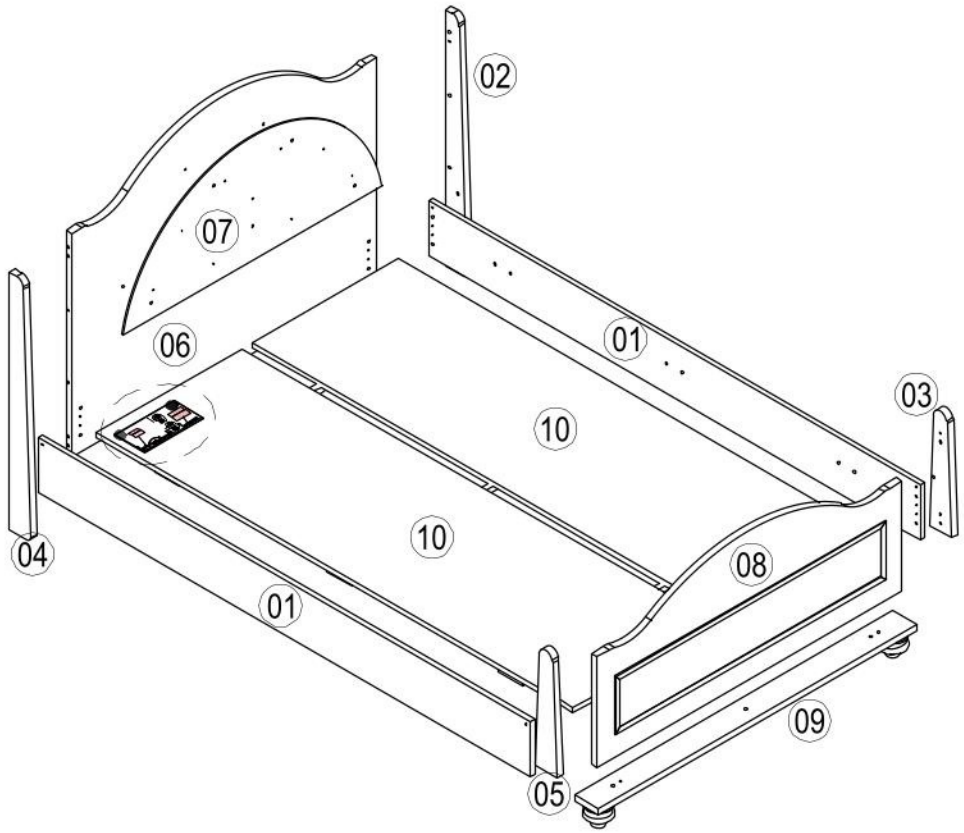

NO	ADET/PCS	ÖLÇÜ/DIMENSIONS	NO	ADET/PCS	ÖLÇÜ/DIMENSIONS	NO	ADET/PCS	ÖLÇÜ/DIMENSIONS
01	2	2014 X 196						
02	1	912 X 90						
03	1	429 X 92						
04	1	912 X 90						
05	1	429 X 92						
06	1	1048 X 917						
07	1	858 X 393						
08	1	1048 X 480						
09	1	1104 X 98						
10	2	1950 X 495						

PLEASE ORDER THE SPARE PARTS ACCORDING TO THE REFERENCE NUMBER ON THE DRAWING

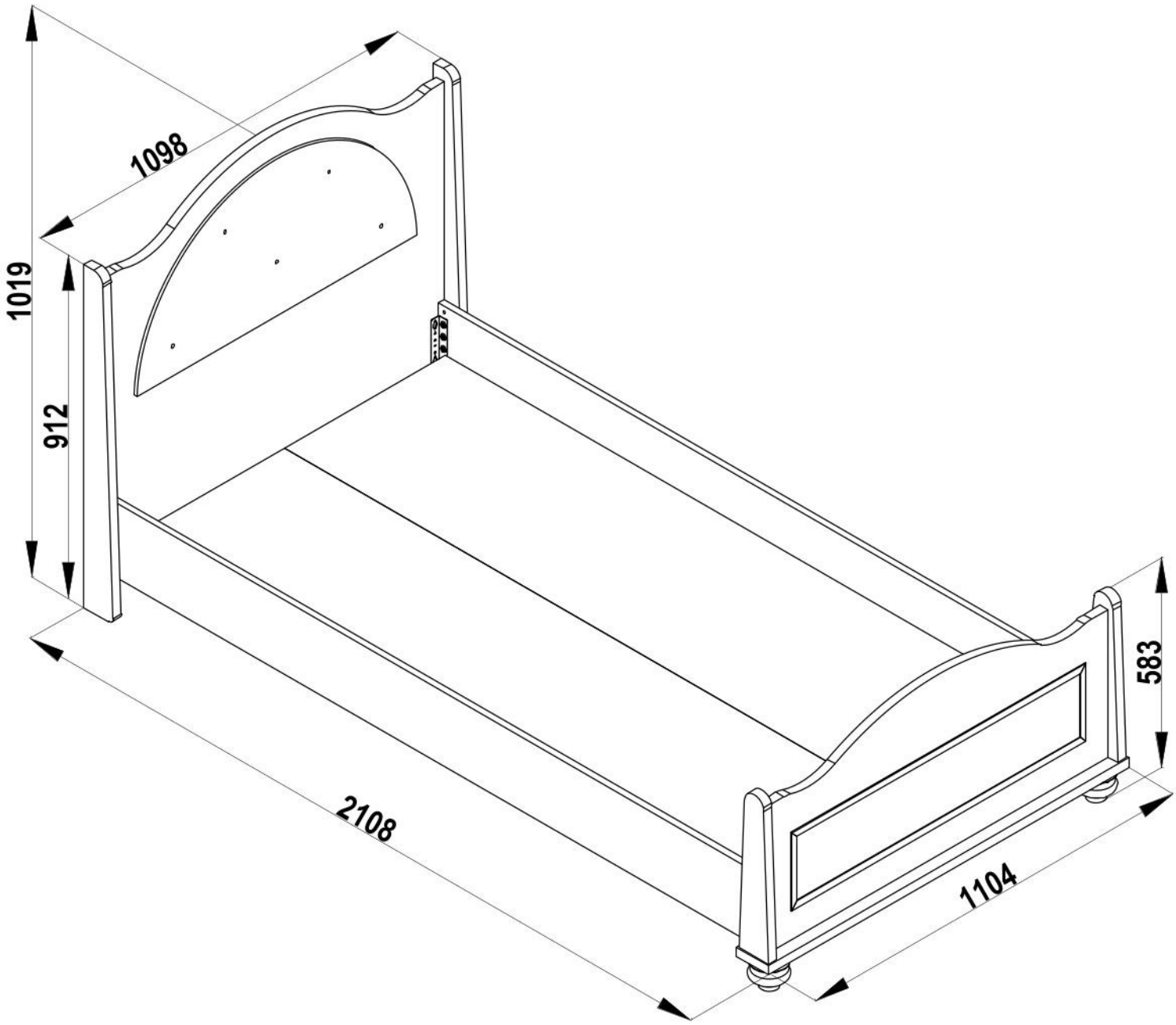
1098
1019
912
583
2108
1104

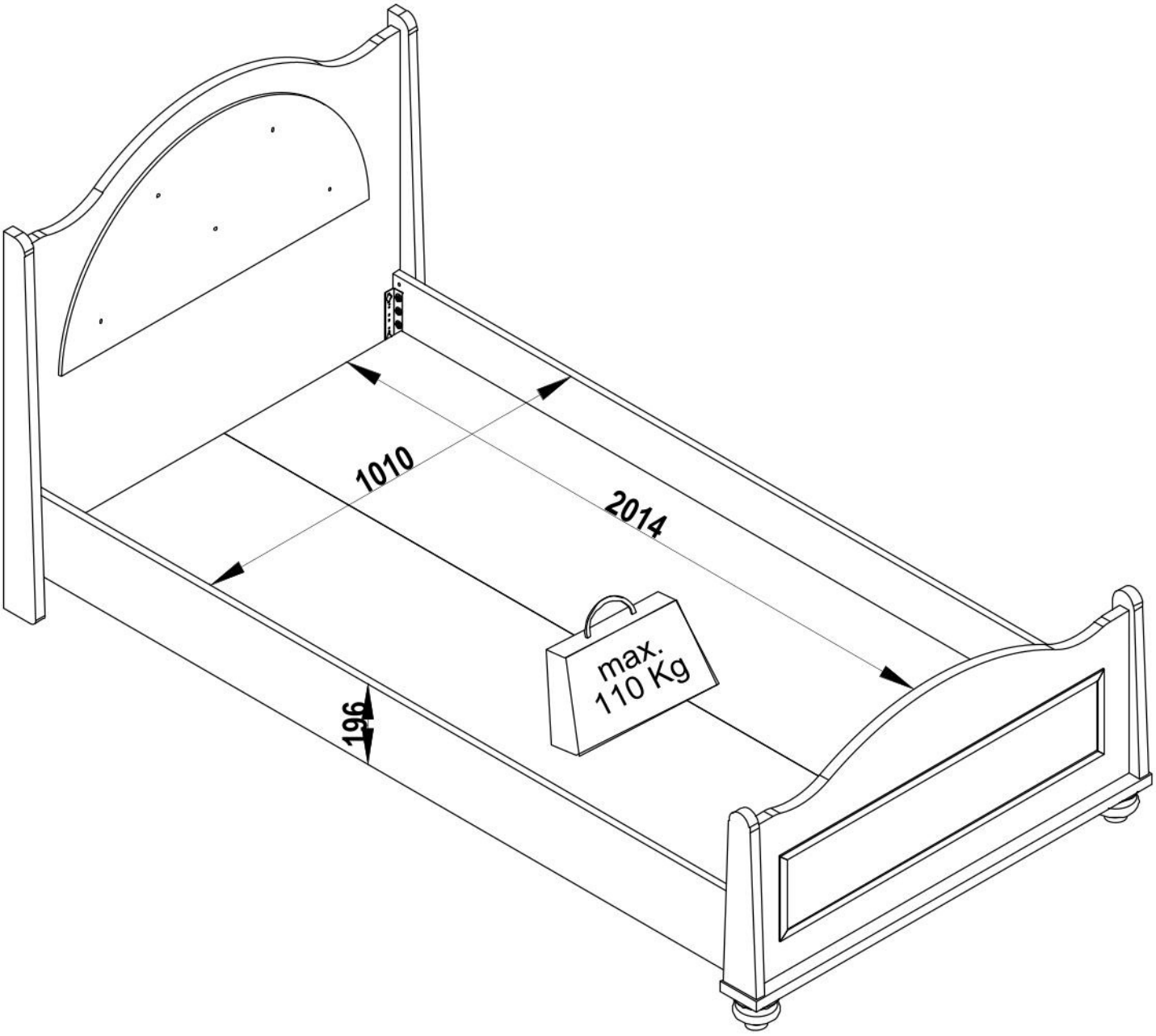
1010
2014
196
max.
110 Kg